416/148

170-160.27

170/160.27

…NCH 408.849 – April 6 – 1910

408,849

…t-Montfort

Pl. unique

Fig. 2

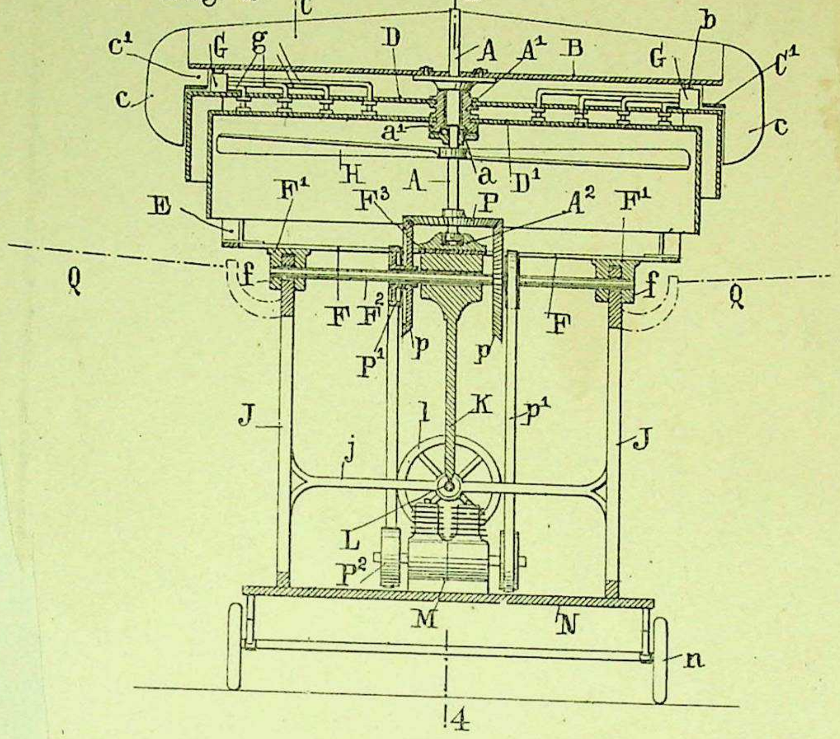

Fig. 4

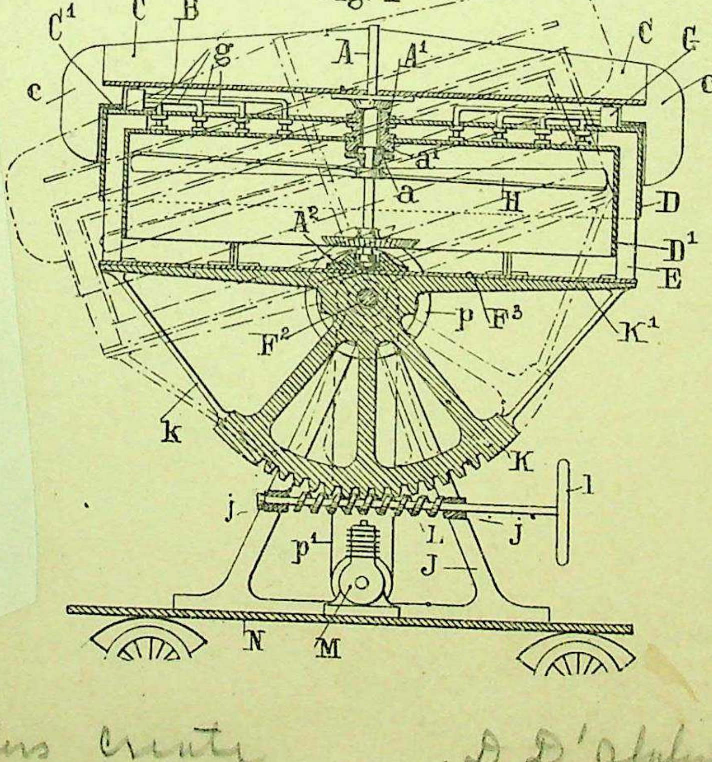

FRENCH FRENCH 408.849 April 6-1910

N° 408.849 M. Issaura

244-19 apr 6/10

Fig. 1

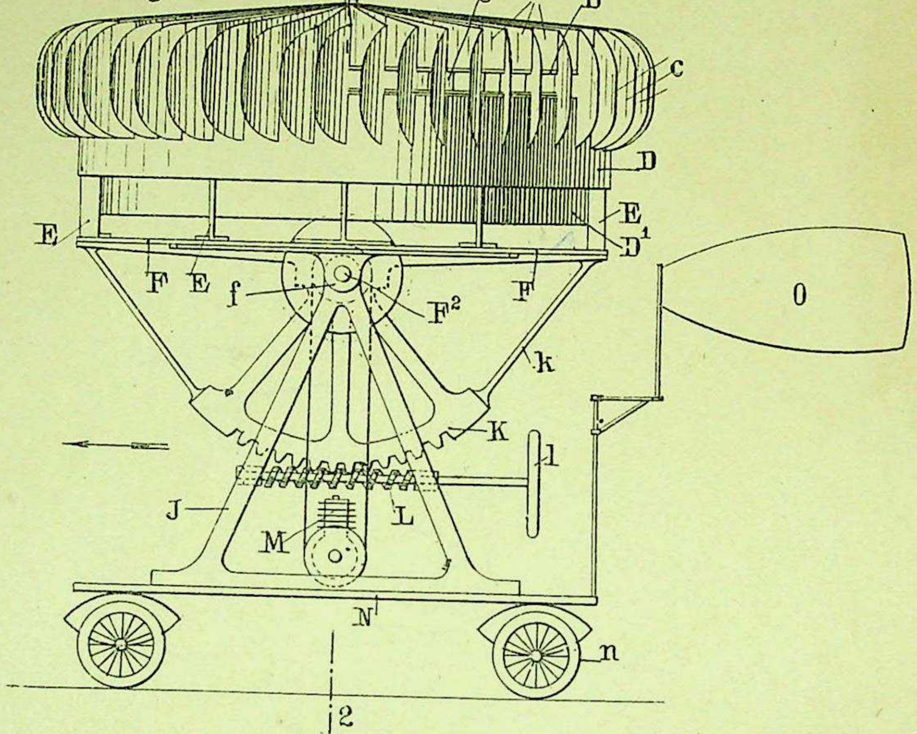

Fig. 3

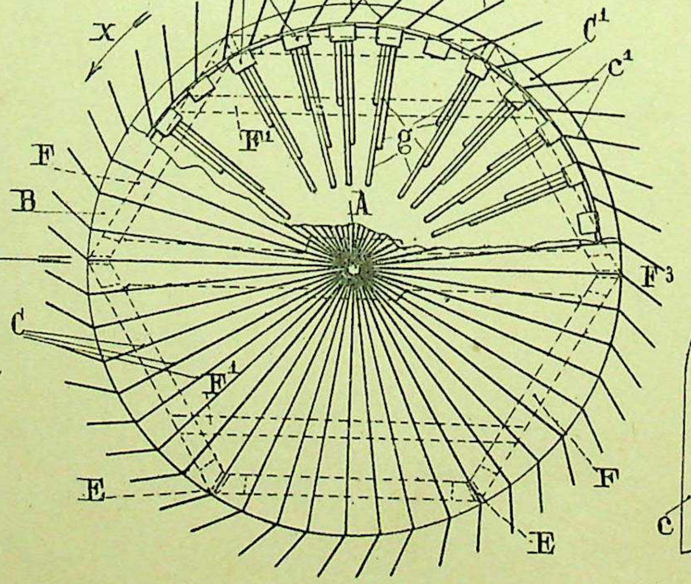

Fig. 5

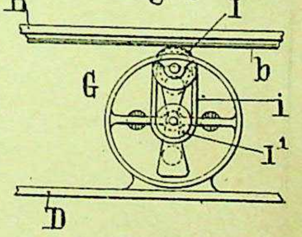

Fig. 6

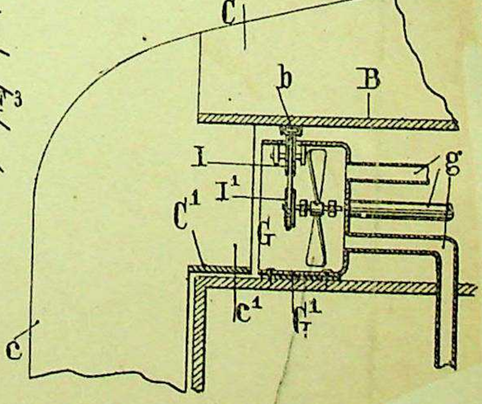

B turns with front and third b drives fans G which force air thro' G